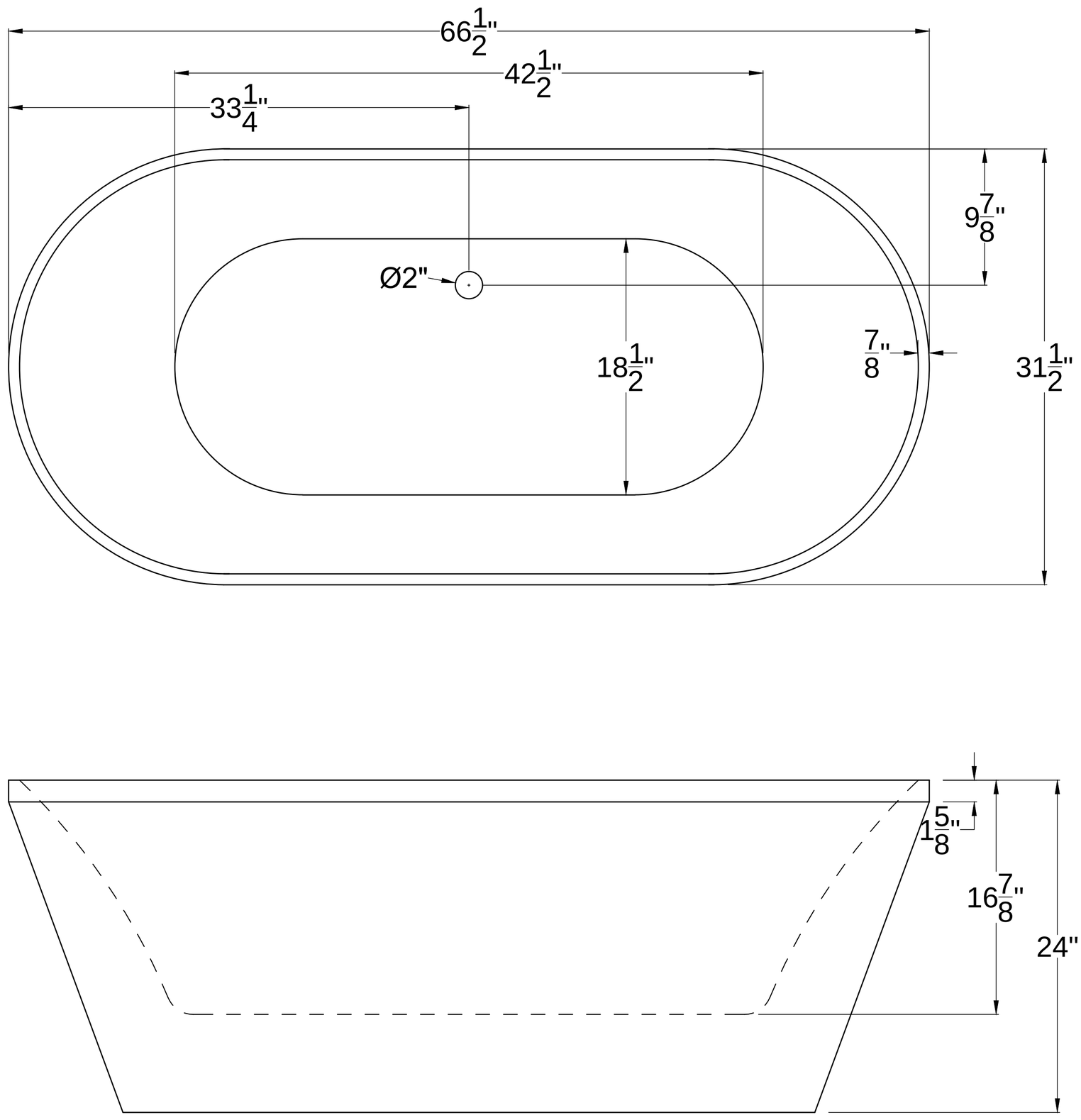
66 1/2"
42 1/2"
33 1/4"
9 7/8"
Ø2"
18 1/2"
7/8"
31 1/2"
1 5/8"
16 7/8"
24"